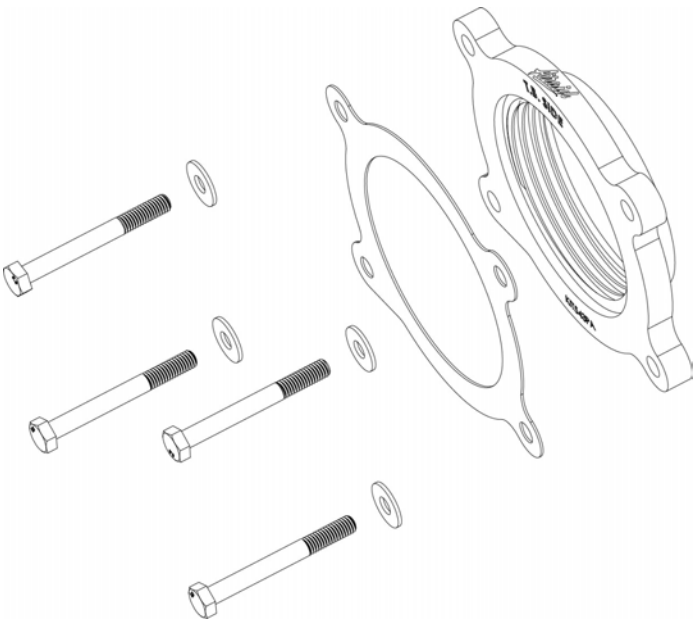

Installation Instructions
Part Number 200-543

CHEVROLET / GMC

2014-20 Silverado 1500 (All)
2015-21 Tahoe
2015-21 Suburban 1500
2014-20 Sierra 1500 (All)
2015-21 Yukon / Yukon XL
2021 Cadillac Escalade / Escalade ESV

NOT LEGAL FOR SALE OR USE ON ANY POLLUTION CONTROLLED MOTOR VEHICLE IN CALIFORNIA OR STATES ADOPTING CALIFORNIA EMISSION PROCEDURES.

See Airaid.com for CARB status on each part for a specific vehicle

Parts List

AIR-KIT543PA	Aluminum Plate	(1)
AIR-KIT543G	Gasket	(1)
AIR-KIT543H	Hardware	
	6mm x 55mm Bolt	(4)
	6mm Flat Washer	(4)

Thank you for purchasing the AIRAID Throttle Body Spacer. Please read the instruction manual carefully before proceeding with the installation. Your AIRAID Throttle Body Spacer was carefully inspected and packaged. Check that no parts are missing, or were damaged during shipping. If you need any assistance please call 1-800-858-3333 to speak with a representative in our Customer Service Center before returning the product.

Thank you for selecting AIRAID.

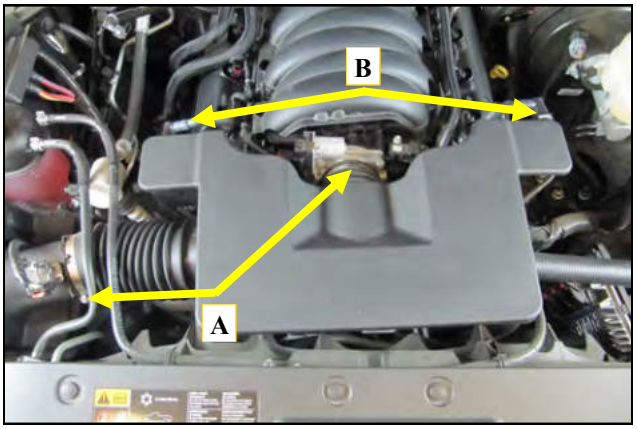

1. <u>Disconnect the negative battery cable!</u>
A.) loosen the clamps securing the intake system to the throttle-body and the airbox.
B.) Disconnect the valve cover breathers from either side of the factory intake System.

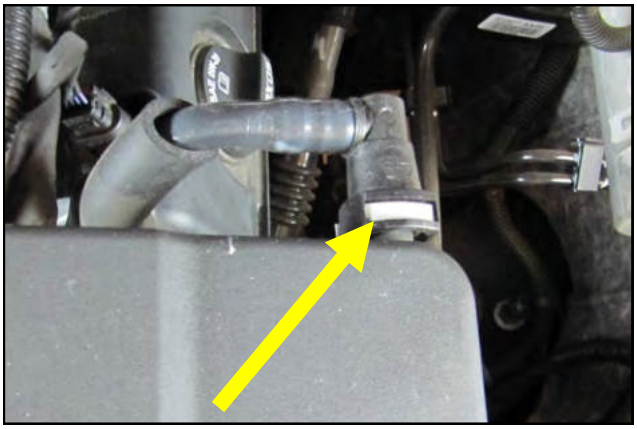

2. The quick connects for the valve cover breathers are removed by depressing the grey locking tab in the fitting and sliding them away.
Remove the factory intake system and set it aside.

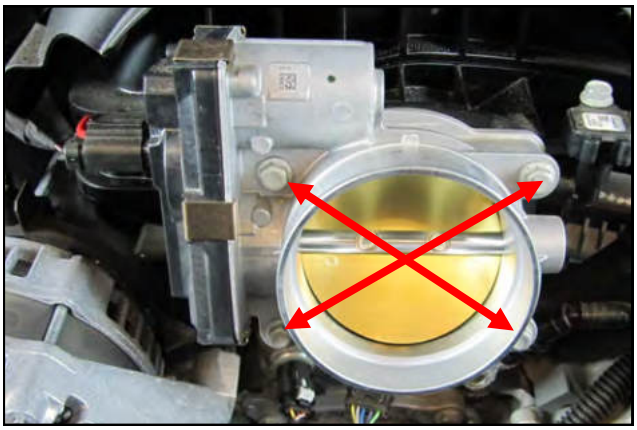

2. Remove the four bolts that secure the throttle body to the intake manifold and set them aside. They will not be reused.

3. Install the AIRAID Spacer into the intake manifold with the supplied gasket on the throttle body side, as shown. *Note: AIRAID spacer must be installed with bore protruding into intake manifold away from throttle body. Incorrect installation will hinder performance. Reference picture below for spacer orientation

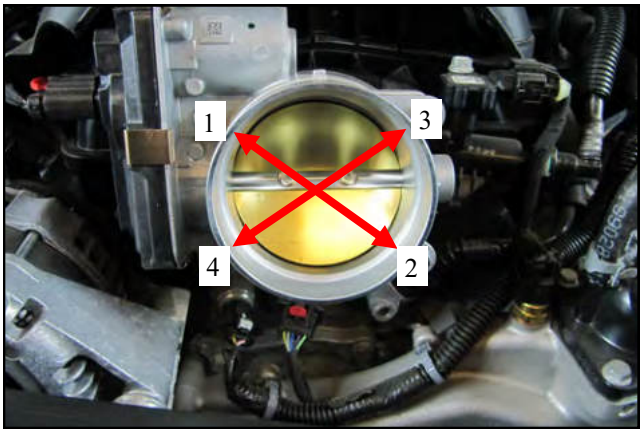

4. Insert the provided bolts with washers through the throttle body, gasket, and AIRAID Spacer and tighten them in an "X" Pattern.

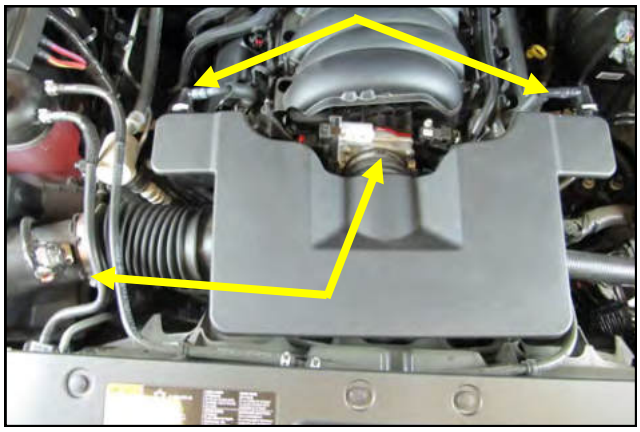

5. Reinstall the intake system and tighten the two hose clamps. Reconnect the valve cover breather lines.

Re-connect the negative battery cable!

The sound of power…The "whistle" means its working!

Example of proper spacer installation. Spacer must protrude into intake manifold and away from throttle body.

AIR-I20543J
Rev. 8/31/20

Contact your nearest Airaid dealer for an Airaid Intake System for your car, truck or SUV.

Airaid. 1455 Citrus St., P.O. Box 1329, Riverside, CA. 92502 1-800-498-6951 AiraidInfo@airaid.com www.airaid.com