200-580 INSTALLATION INSTRUCTIONS
96-05 Chevrolet/GMC S-10/S-15 4.3L
96-00 Fullsize 4.3L

Thank you for purchasing the Airaid Throttle Body Spacer. Please read the instruction manual carefully before proceeding with the installation. Your Airaid Throttle Body Spacer was carefully inspected and packaged. Check that no parts are missing, or were damaged during shipping. If you need any assistance please call 1-800-858-3333 to speak with a representative in our Customer Service Center before returning the product.

Thank you for selecting AIRAID.

THROTTLE BODY SPACERS FOR VEHICLES LISTED ARE 50 STATE LEGAL. SEE AIRAID.COM FOR CARB STATUS ON EACH PART FOR A SPECFIC VEHICLE.

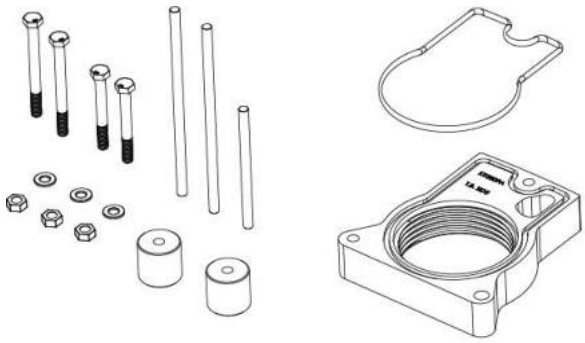

Parts List

AIR-KIT580PA	Aluminum Plate	(1)
AIR-KIT580H	Hardware	
	6mm x 3 1/2" long Stud (for rear)	(1)
	6mm x 60mm Bolts	(2)
	6mm x 5 1/2" Studs	(2)
	6mm x 50mm Bolts	(2)
	6mm Nuts	(3)
	6mm Flat Washers	(3)
	1" long Aluminum Spacers	(2)
	"O"-Ring .138 diameter	(1)

Tools List

10 mm Socket
7/32 Socket
Flathead Screwdriver

Installation Instructions. Read Me!

1. **DISCONNECT NEGATIVE (-) BATTERY CABLE.**
2. Remove air cleaner housing from throttle body.
3. Using 10mm socket, remove (2) stud nuts from front side of throttle body **(Ref. "C").**
4. Remove air cleaner housing riser and (1) stud nut from back side of throttle body **(Ref. "D").**
5. Remove stud from stud nut. Install stud supplied with parts kit. **(Fig. 2 & 3)**
6. Remove throttle linkage bracket and (2) stud nuts **(Ref. "B").**
7. Lift throttle body and locate power plate with "O" ring up and reinstall using **(Ref. "C" & "D")** as examples.
8. Locate and install (2) 1" long aluminum spacers under throttle linkage bracket **(Ref. "B").**
9. Inspect & Test throttle linkage for full Open & Closed travel before driving. Some cruise or kickdown cables may require adjustment. Refer to service manual for proper adjustment.
10. Reinstall air cleaner housing using **(Step 2)** as an example.
11. Reconnect battery cable. Enjoy!

The sound of power…The "whistle" means its working!

Ref. B- (2) Aluminum Spacers
(2) 6mm x 50mm Bolts

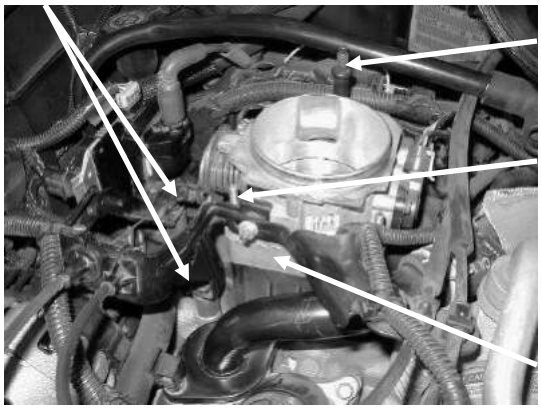

Ref. D- (1) 6mm x 3 1/2" Stud
(1) 6mm Flat Washer
(1) 6mm Nut

Ref. C- (2) 6mm x 60mm Bolts
(2) 6mm Flat Washers
* **Note: Some early models will require (2) 6mm x 5 1/2" Studs which are included in your parts bag.**

Ref. A- (1) Power Plate

Figure 1

Figure 2

Separates

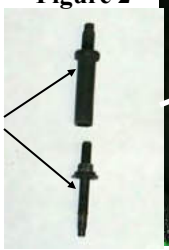

Figure 3

AIR-I20580D
Rev. 08-27-20