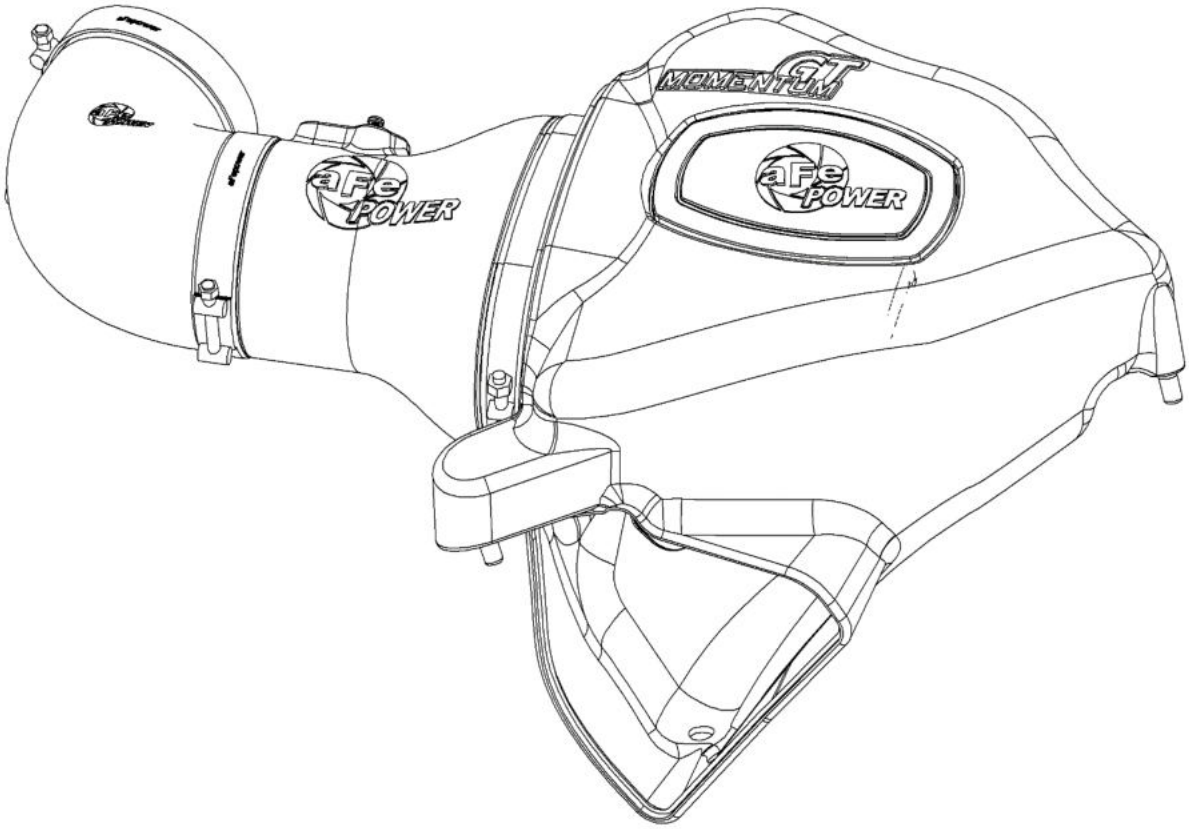

advanced FLOW engineering Momentum GT Cold Air Intake System

Instruction Manual P/N: 50-70049D / 50-70049R

Make: **Cadillac** Model: **CTS-V** Year: **2016-2019** Engine: **V8-6.2L (sc) LT4**

- **Please read the entire instruction manual before proceeding.**
- **Ensure all components listed are present.**
- **If you are missing any of the components, call customer support at 951-493-7100.**
- **Ensure you have all necessary tools before proceeding.**
- **Do not attempt to work on your vehicle when the engine is hot.**
- **Disconnect the negative battery terminal before proceeding.**
- **Retain factory parts for future use.**

Label	Qty.	Description	Part Number
A1	1	Air Filter (Pro 5R)	24-91107
A2	1	Air Filter (Pro DRY S)	21-91107
B	1	Tube	05-5070049B1
C	1	Housing	05-5070049B2
D	1	Plug, Air Box	05-00937
E	2	Clamp, T-bolt (4-1/16" - 4-3/8")	03-50262
F	1	Coupling, Silicone Elbow	05-01513
G	2	Screw, Torx: M4 x .7 x 8mm	03-50491

Installation will require the following tools:

8mm nut driver, T15 & T20 Torx drivers, 11mm deep socket and driver

Emissions Disclaimer: This product is not currently CARB exempt and is not available for purchase in California or for use on any vehicle registered with the California Department of Motor Vehicles.

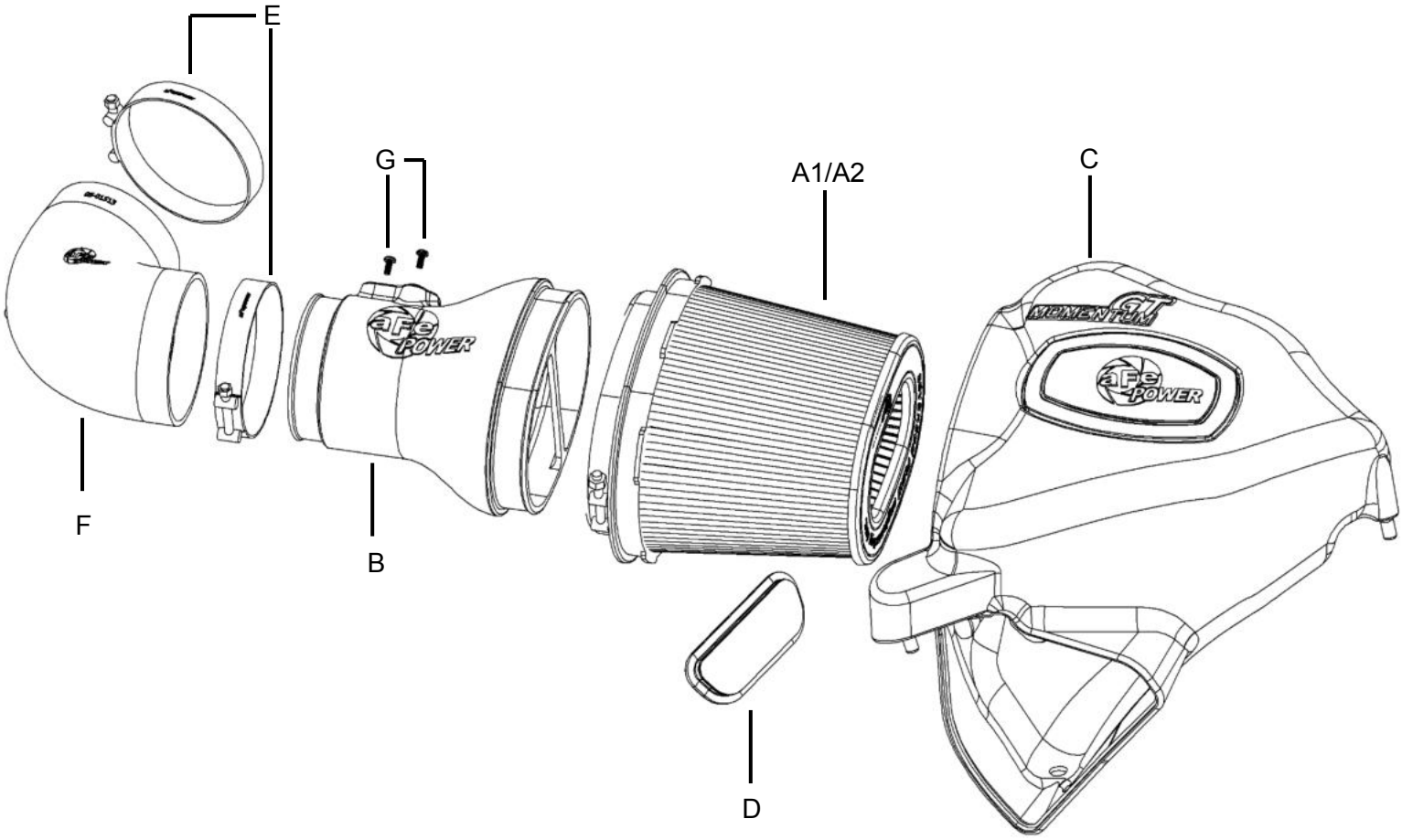
E
G
A1/A2
C
F
B
D

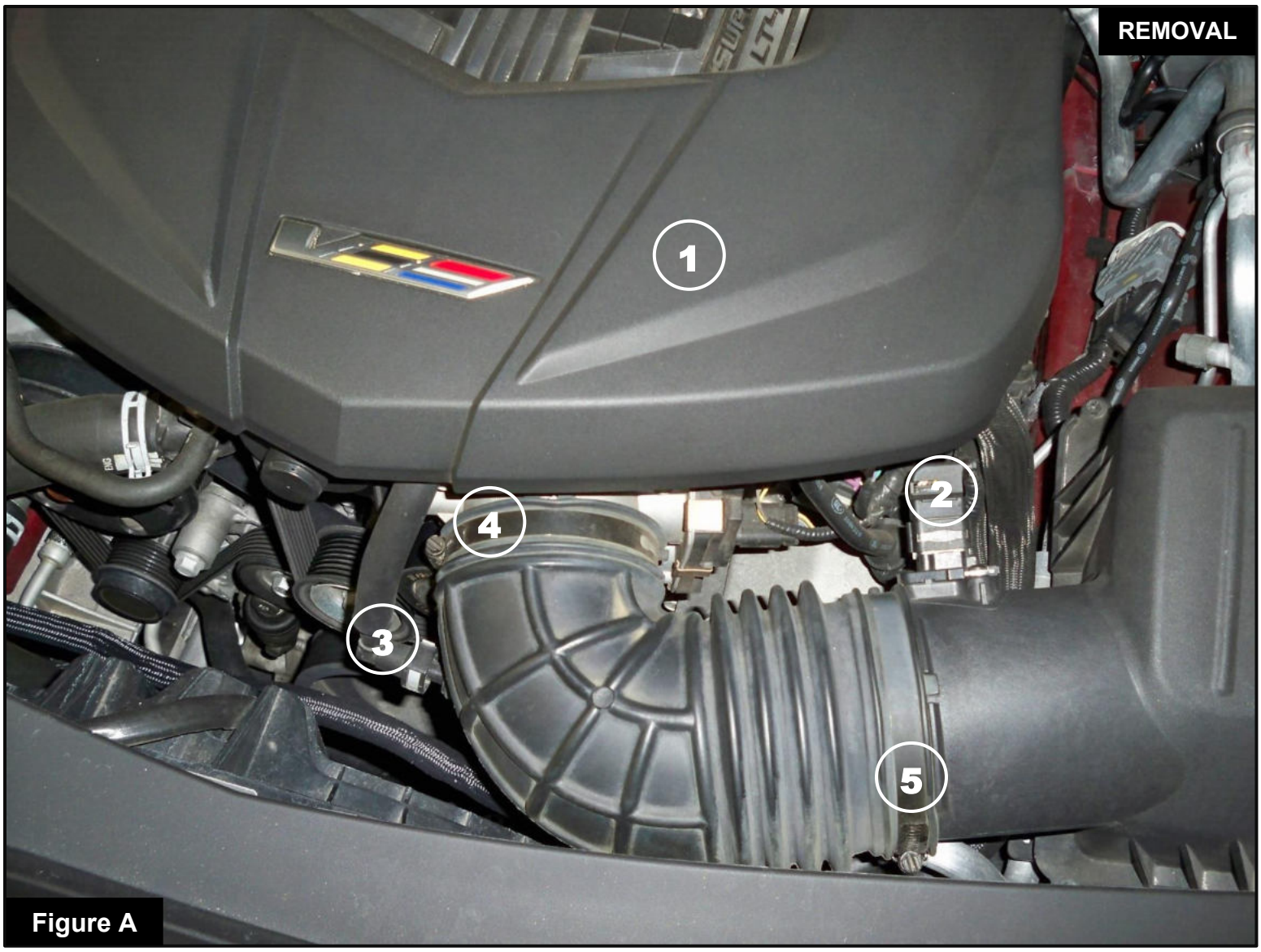

Figure A

Refer to Figure A for Steps 1-4

Step 1: Remove the engine cover (1) and set aside.

Step 2: Disconnect the MAF sensor (2) and the breather hose (3).

Step 3: Using an 8mm nut driver, loosen the hose clamps at the throttle body (4) and at the housing (5).

Step 4: Remove the intake tube.

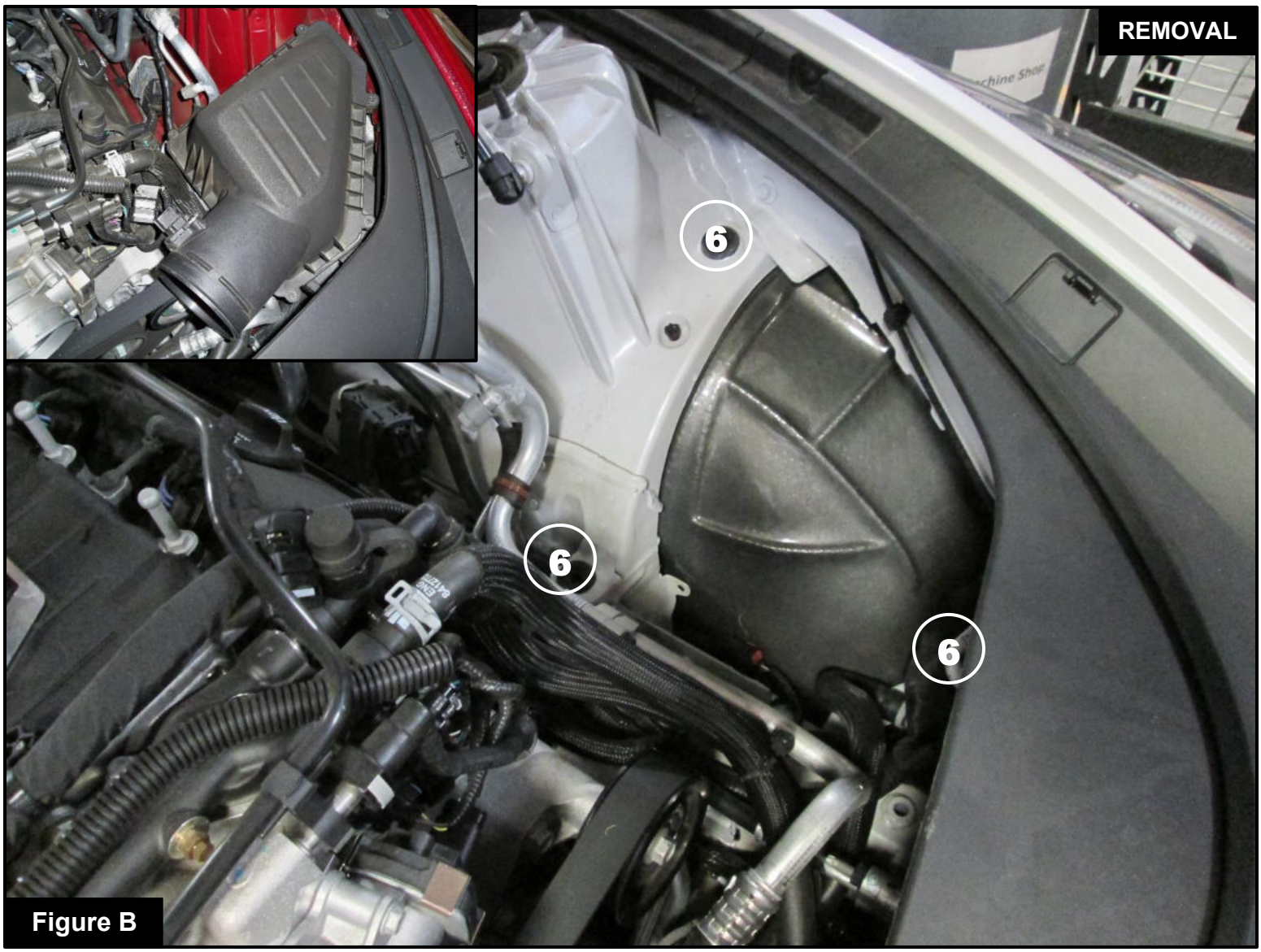

Figure B

Refer to Figure B for Step 5

Step 5: Make sure to detach any wiring harnesses or hoses from the housing if needed. Remove the housing by pulling up in order to release it from its mounting grommets (6). Make sure the mounting grommets are still in the chassis mounting tabs. If they pulled out and are stuck in the lower half of the housing, remove them from the housing and insert them back on the chassis mounting tabs.

Figure C

Refer to Figure C for Steps 6-7

Step 6: Use the provided plug (7) to close the additional air inlet if you want to completely seal the aFe housing. Best performance gain is obtained by having more air flow (no plug).

Step 7: Slide the aFe filter and clamp into the aFe housing and push it in until it locks into place. Do not tighten the clamp at this time.

Figure D

Refer to Figure D for Step 8

Step 8: Install the aFe housing assembly into the vehicle by pushing down the mounting pins on the aFe housing into the mounting grommets. ***Make sure the pins are completely through the mounting grommets.***

Figure E

Refer to Figure E for Steps 9-10

Step 9: Using a T15 Torx driver, remove the MAF sensor (8) from the upper half of the factory housing.

Step 10: Using a T20 Torx driver, install the MAF sensor into the aFe intake tube using the two supplied M4 screws.

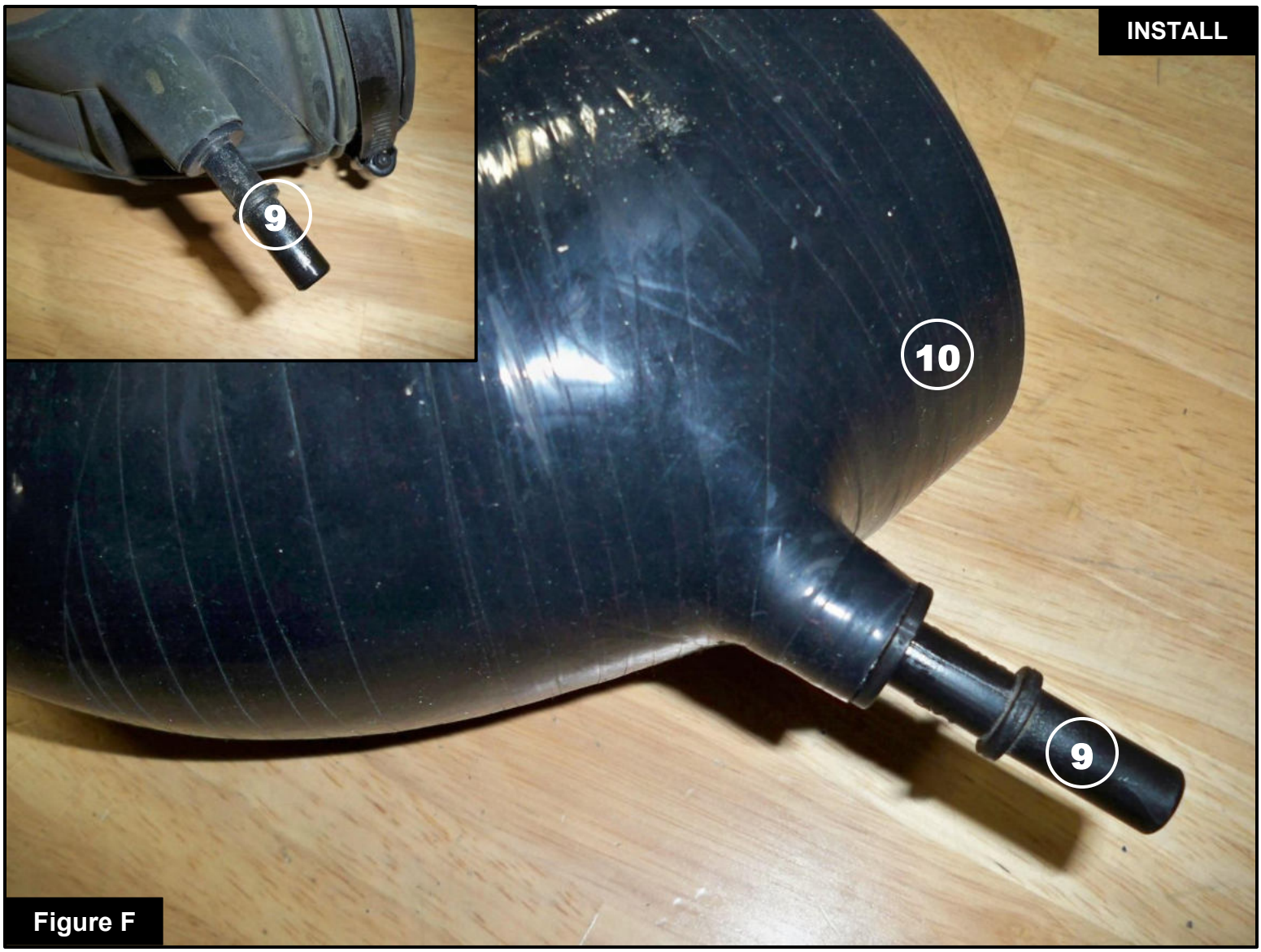

Figure F

Refer to Figure F for Step 11

Step 11: Remove the plastic PCV fitting (9) from the factory intake tube by applying a little lube at the fitting and then with a rotating motion pulling it outwards. Install the plastic PCV fitting in the supplied silicone coupling (10).

Figure G

Refer to Figure G for Step 12

Step 12: Install the aFe intake tube (11) into the air filter. Do not tighten the clamp at this point.

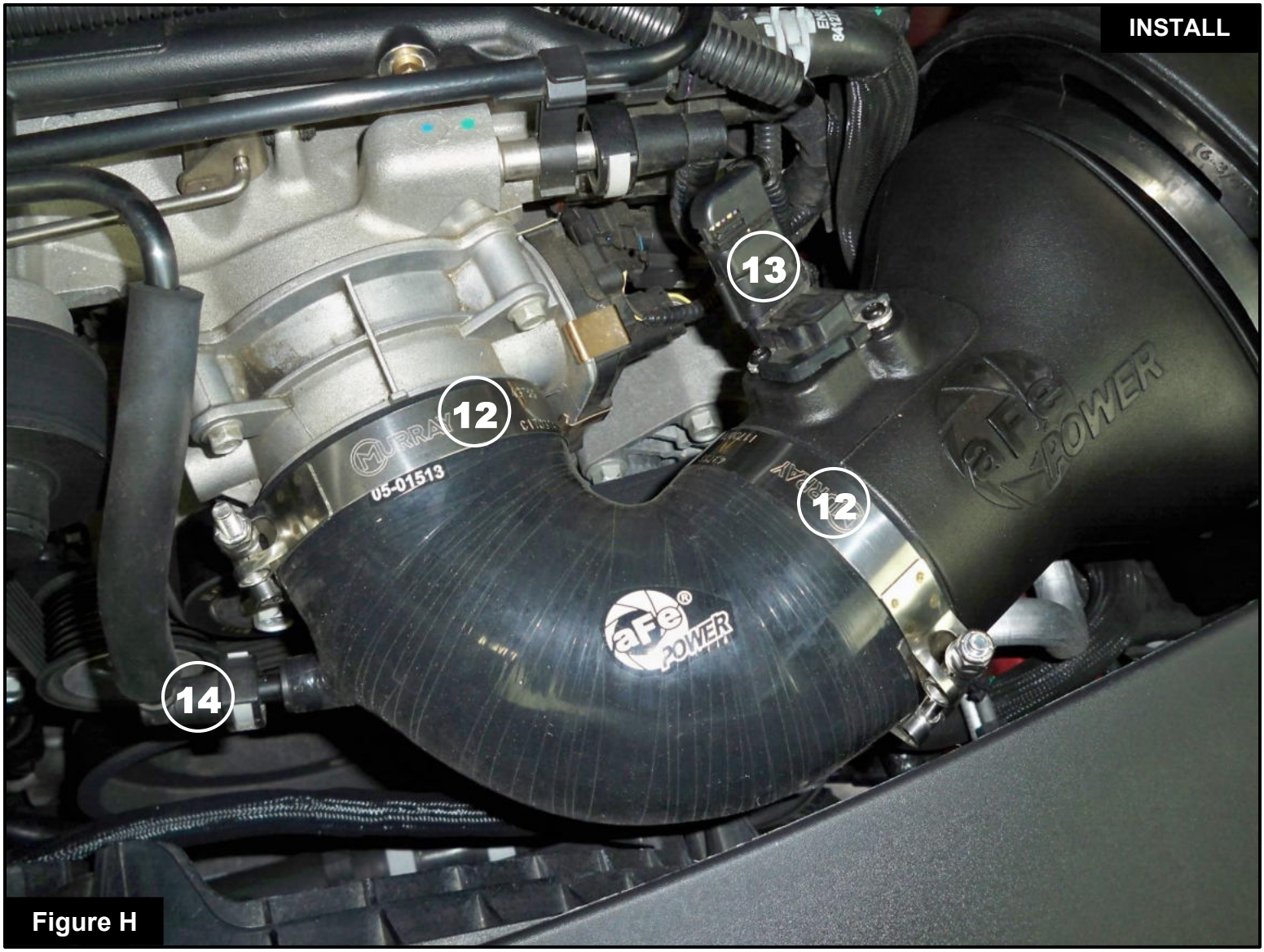

Figure H

Refer to Figure H for Steps 13-14

Step 13: Install the silicone coupling with the supplied T-bolt clamps (12) onto the throttle body and the aFe intake tube. Align the coupling and the aFe intake tube then tighten all three clamps using an 11mm deep socket and driver.

Step 14: Connect the MAF sensor (13) and the breather hose (14).

Figure I

Refer to Figure I for Steps 15-16

Step 15: Reinstall the engine cover (15).

Step 16: Check all the components are tight and secure. Your installation is now complete. Thank you for choosing aFe POWER!

NOTE: Check all screws, clamps, and connectors are secure after 100-200 miles.

Page left blank intentionally

Pro DRY S Air Filter

P/N: 21-91107

Pro 5R Air Filter

P/N: 24-91107

Pre-Filter

P/N: 28-10043

Pro DRY S Restore Kit

P/N: 90-59999

Blue Squeeze Restore Kit

P/N: 90-50501

Tactical Backpack

P/N: 40-33205-B

Flashlight LED

P/N: 40-10202

Mechanic Gloves (L)

P/N: 40-10149

To purchase any of the items above, view airflow charts, dyno graphs, photos, and video; please go to aFepower.com.

Warranty

General Terms:

- aFe warrants their products to be free from manufacturer's defects due to workmanship and material.
- This warranty applies only to the original purchaser of the product and is non-transferrable.
- Proof of purchase of the aFe product is required for all warranty claims.
- Warranty is valid provided aFe instructions for installation and/or cleaning were properly followed.
- Proper maintenance with regular inspections of product is required to insure warranty coverage.
- Damage due to improper installation, abuse, unauthorized repair or alteration is not warranted.
- Incidental or consequential damages or cost, including installation and removal of part, incurred due to failure of aFe product is not covered under this warranty.
- All warranty is limited to the repair and/or replacement of the aFe part. To request Return Goods Authorization ("RGA"), email RGA@afepower.com or call (951)493-7100. Upon receipt of the RGA, you must return the product to the address provided in the RGA, freight prepaid and accompanied with a dated proof of purchase and the RGA. Upon receipt of the defective product and upon verification of proof of purchase, aFe will either repair or replace the defective product within a reasonable time, not to exceed thirty days.

Product Category	P/N Prefix	Warranty duration
Direct OE Replacement Filters	10, 11, 30, 31, 71, 73	Life of the vehicle
Racing Filters	18	1 year
Universal	20, 21, 23, 24, 72, TF	2 years
Air Intake Systems	50, 51, 53, 54, 55, 56, 57, 58, 75, TR, TA, TL, TM	2 years
Exhaust Systems	49	2 years
Intercoolers & Intercooler Tubes	46-2	2 years
Intake Manifolds	46-1	2 years
Differential Cover	46-7	Life of the vehicle
Exhaust Manifolds	46	2 years
Throttle Body Spacers	46-3	2 years
Turbochargers	46-6	2 years*
Fluid Filters	44	90 days
Pre-Filters	28	2 years
Heavy Duty OE Replacement	70	2 years
PowerSports OE Replacement	81, 87	2 years
PowerSports Intake Systems	85	2 years

No other warranty expressed or implied applies nor is any person or advanced FLOW engineering authorized to assume any other warranty. Some States do not allow the exclusion or limitation of incidental or consequential damages or do not allow limitations on how long an implied warranty lasts, so the above limitations or exclusions may not apply to you. This warranty gives you specific legal rights, and you may also have other rights which vary from State to State.

*See turbocharger warranty for more info

advanced FLOW engineering, inc.
252 Granite Street Corona, CA 92879
TEL: 951.493.7100 • TECH: 951.493.7134
E-Mail:Tech@aFepower.com

P/N: 06-81282